SFM970013 B

NOTES : 1. IN ORDER TO PREVENT THAT EACH PROTECTOR RESETS AUTOMATICALLY, IT HAS TO BE WIRED THAT THE CIRCUIT IS CLOSED BY MANUAL OPERATION.
2. CONTROL CIRCUIT CURRENT RANGE : 0.2~1.0A.

A1 SPECIAL NOTE

THE PART SHOULD NOT CONTAIN PROHIBITED SUBSTANCES AND DETAIL SHOULD COMPLY WITH SCI-RoHS & REACH[SVHC] SUBSTANCE LIST. (STD100001)

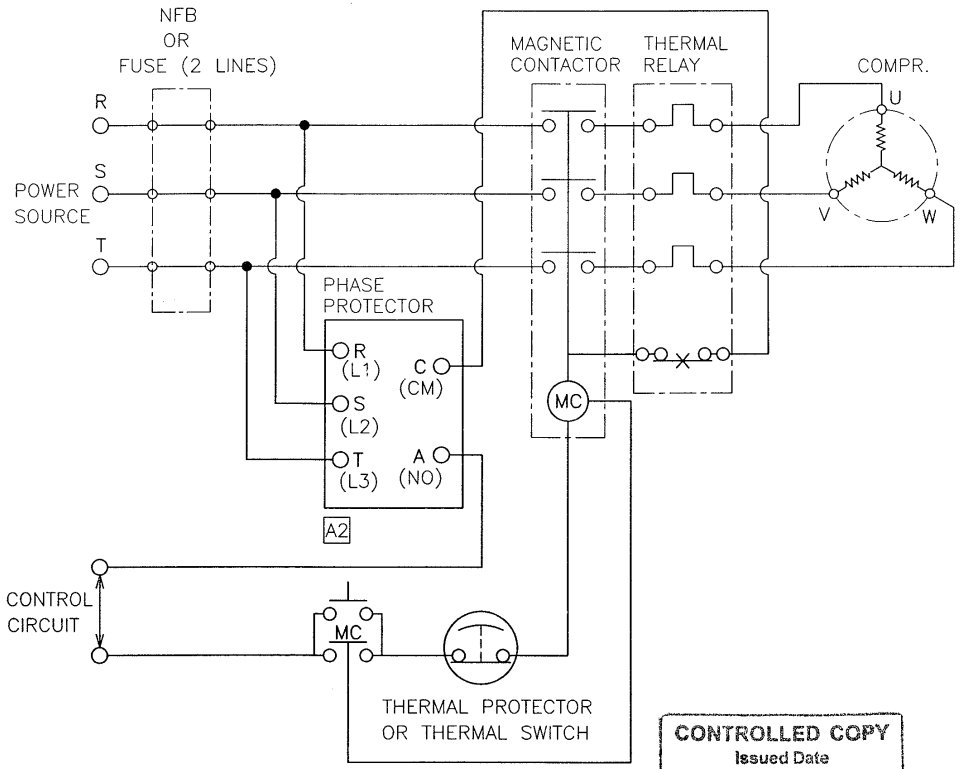

CONTROLLED COPY
Issued Date
18 MAR 2010
TECHNICAL DIVISION
SCI

CHANGE	USE FOR MODEL	SIAM COMPRESSOR INDUSTRY CO.,LTD.	TITLE WIRING DIAGRAM
	☐ S ☐ R ☐ T ☐ P ☒ N ☒ A ☒ B	DIM. IN mm. / SCALE NTS	DATE 98-01-19 / DRAWN B.PREECHA / CHECKED / DESIGNED / APPROVED	DWG. No. CS01F037	1/2

DWG. NO.	DWG. TITLE	SUB				DWG. CODE	DATE MADE	MADE BY
CS01F037	WIRING DIAGRAM	P/N	*	DWG.	A		10/03/16	

ITEM	DESCRIPTION	MATERIAL CODE	MATERIAL DIMENSION	DEV	QTY/SET	DEV	TOOL CODE	PERSON
H00	WIRING DIAGRAM							

CONTROLLED COPY
Issued Date
18 MAR 2010
TECHNICAL DIVISION
SCI

CHANGE	USE FOR MODEL	SIAM COMPRESSOR INDUSTRY CO.,LTD.	TITLE WIRING DIAGRAM
	☐ S ☐ R ☐ T ☐ P ☒ N ☒ A ☒ B	DIM. IN mm. / SCALE NTS	DATE 98-01-19 / DRAWN B.PREECHA / CHECKED / DESIGNED / APPROVED	DWG. No. CS01F037	2/2

A1 (A-1) SPECIAL NOTE WAS CHANGE.
A2 (D-2) DRAWING WAS AS BELOW.

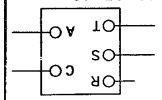

10-03-16
C.SURIWIPHA

CHANGE